TYPE: A5GL1

GLOBE VALVE - CLASS 800 - FORGED STEEL ASTM A105N

THREADED END NPT OR SOCKET WELD

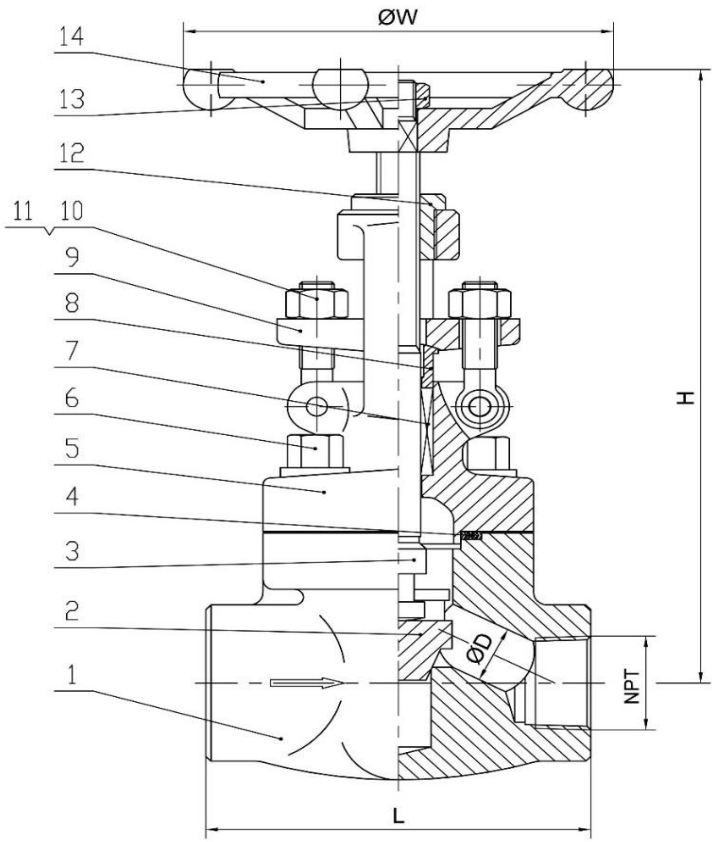

NO.	PART NAME	MATERIAL
1	Body	ASTM A105N HARD-FACE STL SEAT
2	Disc	ASTM A276 420 + STL
3	Stem	ASTM A182 F6a
4	Bonnet gasket	Graphite + SS304
5	Bonnet	ASTM A105N
6	Bonnet bolt	ASTM A193 B7
7	Stem packing	Graphite
8	Gland	ASTM A276 420
9	Gland flange	ASTM A105N
10	Gland eyebolt	ASTM A29 1035
11	Gland Nut	ASTM A194 2H
12	Stem nut	ASTM A276 410
13	Locking nut	ASTM A29 1035
14	Handwheel	ASTM A197

MANUFACTURE STANDARD		
	Valve Design	API 602 BS 5352
	Test and Inspection	API 598
	Threaded End	ASME B1.20.1
	Socket End	ASME B16.11
	Pressure rating	Class 800

DIMENSIONS:

NPT	DN	D	L	H	W
1/2	15	10	79	168	100
3/4	20	13	92	169	100
1	25	17	111	212	125
1-1/4	32	23	120	235	160
1-1/2	40	27	152	267	160
2	50	33	172	300	180

Drawing No.	Date	Type	Rev. No.	By
A51002	2016.05.30	A5GL1	03	AT

THREADED END NPT OR SOCKET WELD