TYPE: A5CH1-A150

SWING CHECK - CLASS 150 - FORGED STEEL ASTM A105N

FLANGE END ANSI-150

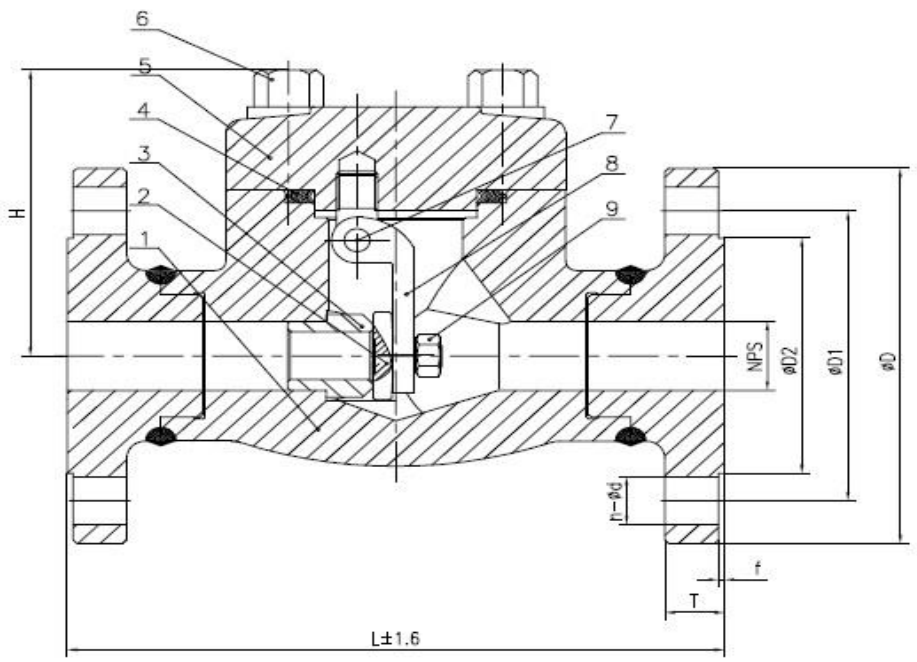

NO.	PART NAME	MATERIAL
1	Body	ASTM A105N
2	Disc	ASTM A182 F6a
3	Seat	ASTM A182 F6a
4	Gasket	SS + Flexible Graphite
5	Bonnet	ASTM A105N
6	Bolt	ASTM A193 B7
7	Pin	ASTM A276 410
8	Hinge	SS304
9	Nut	ASTM A194 2H

MANUFACTURE STANDARD		
	Valve Design	API 602 BS5352
	Test and Inspection	API 598
	End Flange	ASME B16.5
	Face to Face	ASME B16.10
	Temperature	-29 - 425 °C

DIMENSIONS:

SIZE	DN	d	L	H	D	D1	D2	T	f	n-Ød		
1/2	15	10.3	108	66	90	60.5	35	11	2	4-16		
3/4	20	13.5	117	67	100	70	43	12.5	2	4-16		
1	25	18	127	82	110	79.5	51	14	2	4-16		
1-1/4	32	23	140	87	115	89	63.5	16	2	4-16		
1-1/2	40	28	165	106	125	98.5	73	17.5	2	4-16		
2	50	36	203	123	150	120.5	92	19	2	4-19		

Drawing No.	Date	Type	Rev. No.	By
A51008	2015.05.30	A5CH1-A150	03	AT

FLANGE END ANSI-150