TYPE: A5CH1

SWING CHECK - CLASS 800 - FORGED STEEL ASTM A105N

THREADED END NPT OR SOCKET WELD

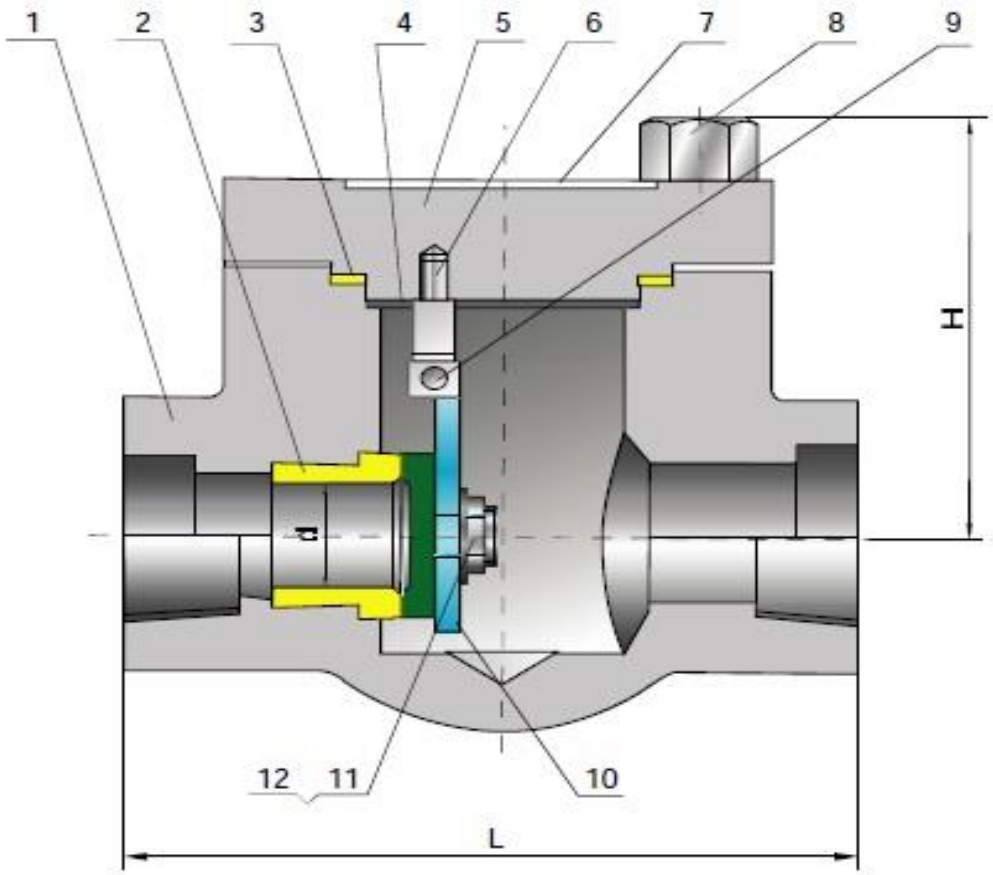

NO.	PART NAME	MATERIAL
1	Body	ASTM A105N
2	Seat ring	ASTM A276 420 + STL
3	Gasket	Graphite + SS304
4	Disc	ASTM A276 420
5	Cover	ASTM A105N
6	Supporter	ASTM A276 304
7	Nameplate	Aluminium
8	Bolt	ASTM A193 B7
9	Hinge pin	ASTM A276 304
10	Hinge	ASTM A276 420
11	Nut	ASTM A276 304
12	Washer	ASTM A276 304

MANUFACTURE STANDARD		
	Valve Design	API 602
	Test and Inspection	API 598
	Threaded End	ASME B1.20.1
	Socket End	ASME B16.11
	Pressure rating	Class 800

DIMENSIONS:

NPT	DN	d	L	H								
1/2	15	10	79	61								
3/4	20	14	92	78								
1	25	18	111	84								
1-1/4	32	24	120	101								
1-1/2	40	29	120	120								
2	50	36	140	133								

Drawing No.	Date	Type	Rev. No.	By
A51004	2016.05.30	A5CH1	02	AT

THREADED END NPT OR SOCKET WELD