TYPE: A5CH2-A150

LIFT CHECK - CLASS 150 - FORGED STEEL ASTM A105N

FLANGE END ANSI-150

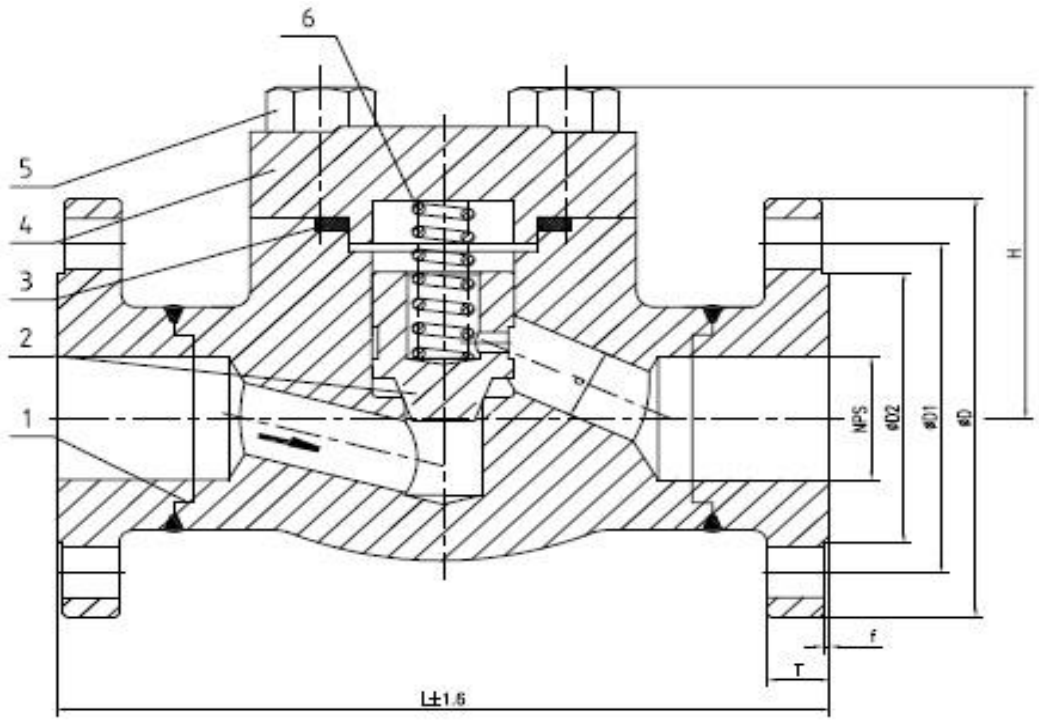

NO.	PART NAME	MATERIAL
1	Body	ASTM A105N+SS304
2	Disc	ASTM A182 F6a
3	Gasket	SS + Flexible Graphite
4	Cover	ASTM A105N
5	Stud	ASTM A193 B7
6	Spring	SS304

MANUFACTURE STANDARD		
	Valve Design	API 602 BS5352
	Test and Inspection	API 598
	End Flange	ASME B16.5
	Face to Face	ASME B16.10
	Temperature	-29 - 425 °C

DIMENSIONS:

SIZE	DN	d	L	H	D	D1	D2	T	f	n-Ød		
1/2	15	10	108	62	90	60.5	35	11	2	4-16		
3/4	20	13	117	63	100	70	43	12.5	2	4-16		
1	25	17	127	78	110	79.5	51	14	2	4-16		
1-1/4	32	22	140	82	115	89	63.5	16	2	4-16		
1-1/2	40	27	165	102	125	98.5	73	17.5	2	4-16		
2	50	33	203	120	150	120.5	92	19	2	4-19		

Drawing No.	Date	Type	Rev. No.	By
A51009	2015.05.30	A5CH2-A150	03	AT

FLANGE END ANSI-150