#A6YS1-J10K

Y-STRAINER - SS304 BODY

FLANGE END JIS 10K

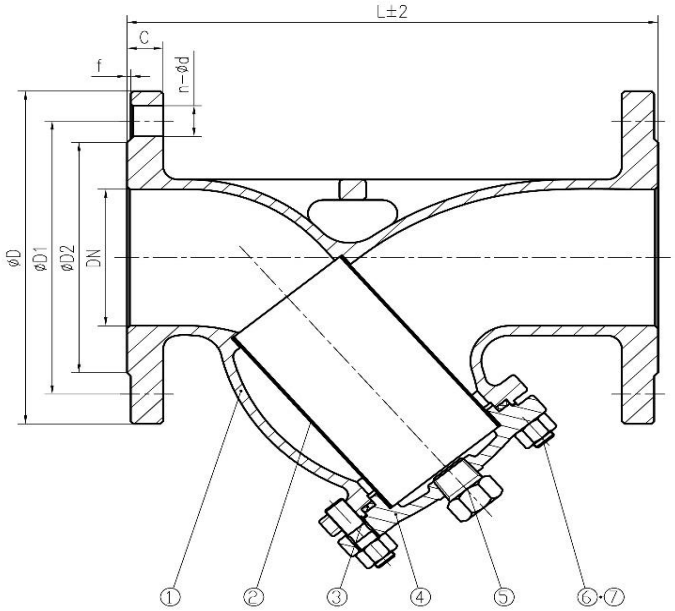

NO.	PART NAME	MATERIAL
1	Body	A351 CF8
2	Screen	SS304
3	Gasket	Spiral wound gasket
4	Cover	A351 CF8
5	Drain plug	A351 CF8
6	Bolt	A193-B8
7	Nut	A194-8

DIMENSIONS:

SIZE	DN	L	C	f	D	D1	n-Øb
1/2"	15	130	12	1	95	70	4-15
3'4"	20	140	14	1	100	75	4-15
1"	25	150	14	2	125	90	4-19
1-1/4"	32	170	16	2	135	100	4-19
1-1/2"	40	200	16	2	140	105	4-19
2"	50	220	16	2	155	120	4-19
2-1/2"	65	252	18	2	175	140	4-19
3"	80	280	18	2	185	150	8-19
4"	100	320	18	2	210	175	8-19
5"	125	350	20	2	250	210	8-23
6"	150	400	22	2	280	240	8-23
8"	200	485	22	2	330	290	12-23

MANUFACTURE STANDARD		
	Valve Design	ASME B16.34
	Valve Test	JIS B2203
	Flange End Dimension	JIS B2220
	Face to Face	FACTORY STD
	Pressure Temperature Rating	ASME B16.34

Drawing No.	Date	Type	Rev. No.	By
A63002	2013.11.28	#A6YS1-J10K	01	AT

FLANGE END JIS 10K