#A6YS2-A150

Y-STRAINER - SS304 BODY

FLANGE END ANSI 150

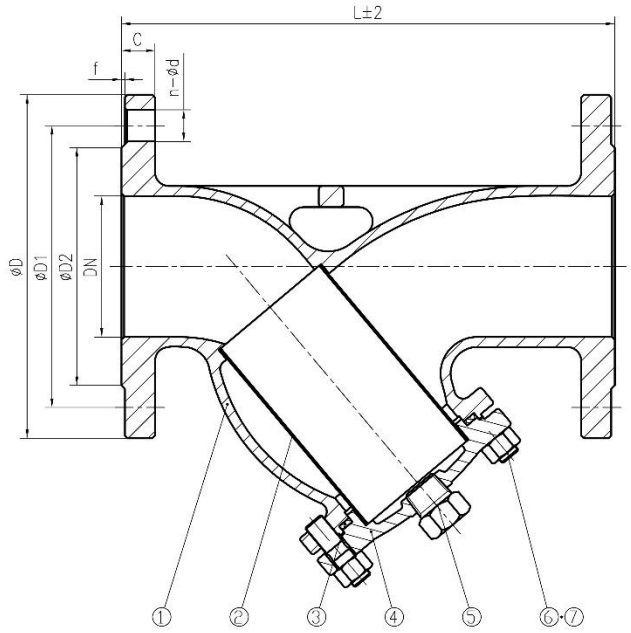

NO.	PART NAME	MATERIAL
1	Body	A351 CF8
2	Screen	SS304
3	Gasket	Spiral wound gasket
4	Cover	A351 CF8
5	Drain plug	A351 CF8
6	Bolt	A193-B8
7	Nut	A194-8

DIMENSIONS:

SIZE	DN	L	C	f	D	D1	n-Øb
1/2"	15	130	10	2	90	60.3	4-16
3'4"	20	140	11	2	100	69.9	4-16
1"	25	150	12	2	110	79.4	4-16
1-1/4"	32	170	13	2	115	88.9	4-16
1-1/2"	40	200	15	2	125	98.4	4-16
2"	50	220	16	2	150	120.7	4-19
2-1/2"	65	252	18	2	180	139.7	4-19
3"	80	280	19	2	190	152.4	4-19
4"	100	320	24	2	230	190.5	8-19
5"	125	350	24	2	255	215.9	8-22
6"	150	400	26	2	280	241.3	8-22
8"	200	485	29	2	345	298.5	8-22

MANUFACTURE STANDARD		
	Valve Design	ASME B16.34
	Valve Test	API 598
	Flange End Dimension	ASME B16.5
	Face to Face	FACTORY STD
	Pressure Temperature Rating	ASME B16.34

Drawing No.	Date	Type	Rev. No.	By
A63001	2013.11.28	#A6YS2-A150	01	AT

FLANGE END ANSI 150