Nominal pressure				4.0MPa			
Test pressure	Shell test	6	Mpa	Test medium	Water	Test temperature	Normal temperature
	Seal test	4.4					
	Gas seal test	0.6			Air		
Applicable medium		Water,Oil,Gas					
Applicable temperature		-29~180°C					

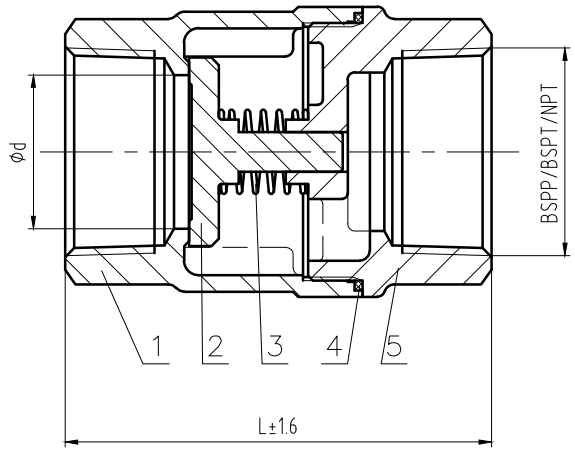

NOTE:

1.Design and Manufacture for valve according to ASME B16.34。

2.Inspection and Test for valve according to API 598。

3.The connection of screwed for valve according to ISO 7/1 or ANSI B1.20.1。

	L	d	BSPP/BSPT/NPT
DN8	61	8	1/4
DN10	61	10	3/8
DN15	61	14	1/2
DN20	66	19	3/4
DN25	77.5	24	1
DN32	86	31	1¼
DN40	95	39	1½
DN50	106	49	2

NO.	DESCRIPTION	QTY	A6SC2 MATERIAL
5	BONNET	1	A351 CF8
4	GASKET	1	RPTFE
3	SPRING	1	SS304
2	DISC	1	A351 CF8
1	BODY	1	A351 CF8

MARK	BEFORE MODIFIED	AFTER MODIFIED	DATE
DRA.		APP.	
CHK.		DATE	

GENERAL DRAWING

SCALE

2PC SCREWED END CHECK VALVE

A6SC2