TYPE: A3CH1-A150

API 600 SWING CHECK VALVE

CLASS 150 - A216-WCB

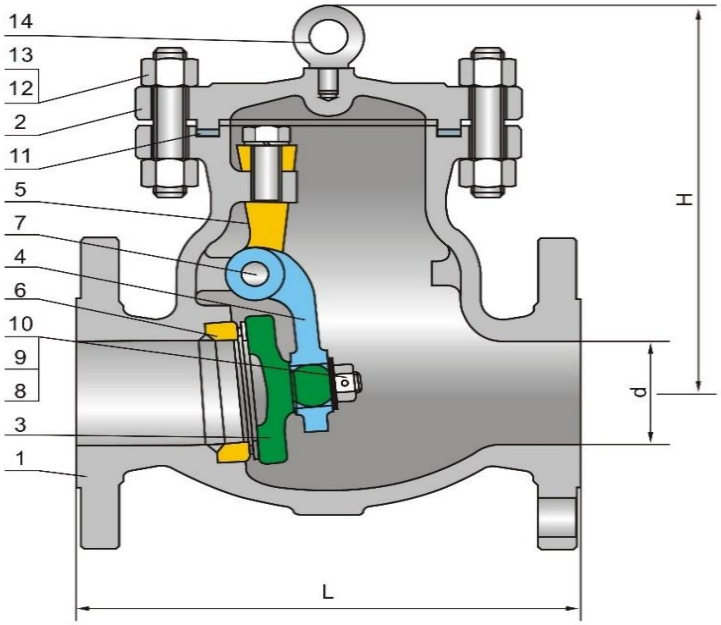

NO.	PART NAME	MATERIAL
1	Body	A216-WCB
2	Bonnet	A216-WCB
3	Disc	A216-WCB+13Cr
4	Hinge	A216-WCB
5	Arm	A216-WCB
6	Seat ring	A105+13Cr
7	Hinge pin	A276-420
8	Disc washer	CARBON STEEL
9	Disc nut	A276-420
10	Disc nut pin	CARBON STEEL
11	Bonnet gasket	304+GRAPHITE
12	Bonnet stud	A193-B7
13	Bonnet stud nut	A194-2H
14	Eyebolt	CARBON STEEL

DIMENSIONS:

SIZE	DN	L	d	H
2	50	203	51	152
2.5	65	216	64	165
3	80	241	76	175
4	100	292	102	204
6	150	356	152	293
8	200	495	203	353
10	250	622	254	390
12	300	699	305	432
14	350	787	337	475
16	400	864	387	525

MANUFACTURE STANDARD		
	Valve Design	API 600 BS1868
	Valve Test	API 598
	Flange End Dimension	ASME B16.5
	Face to Face	ASME B16.10
	Pressure Temperature Rating	ASME B16.34

Drawing No.	Date	Type	Rev. No.	By
A31004	2016.05.30	A3CH1-A150	03	AT

CLASS 150 - A216-WCB

TTS VALVE TECHNOLOGIES SDN BHD