TYPE: A3YS1-A150

ANSI STANDARD Y-STRAINER

CLASS 150 - A216-WCB

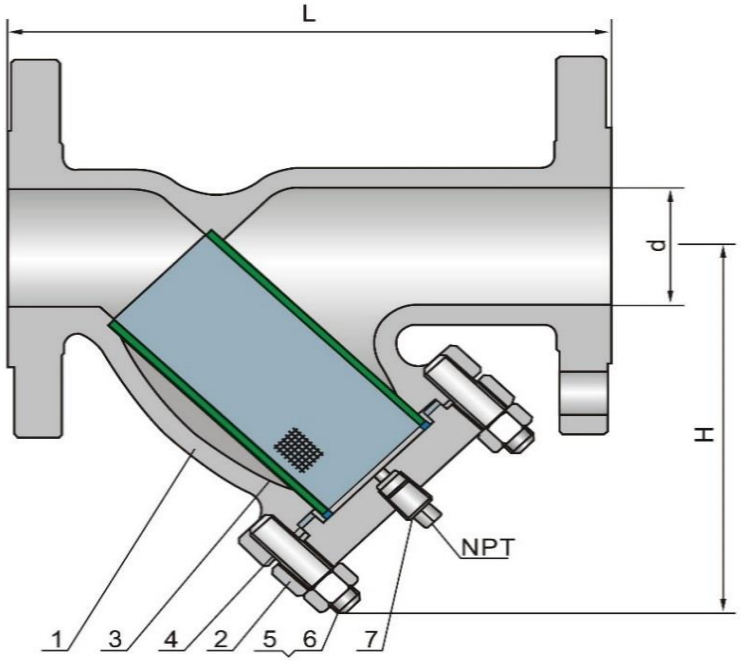

NO.	PART NAME	MATERIAL
1	Body	A216-WCB
2	Bonnet Cap	A216-WCB
3	Screen	SS304
4	Bonnet gasket	304+GRAPHITE
5	Bonnet stud	A193-B7
6	Bonnet stud nut	A194-2H
7	Drain plug	A105

DIMENSIONS:

SIZE	DN	L	d	H	PLUG
2"	50	220	51	155	1/4"
2.5"	65	250	64	175	3/8"
3"	80	280	76	180	3/8"
4"	100	300	102	215	1/2"
6"	150	380	152	315	1/2"
8"	200	480	203	340	1/2"
10"	250	550	254	420	1/2"
12"	300	610	305	495	1/2"

MANUFACTURE STANDARD		
	Valve Design	ASME B16.34
	Valve Test	API 598
	Flange End Dimension	ASME B16.5
	Face to Face	ASME B16.10
	Pressure Temperature Rating	ASME B16.34

Drawing No.	Date	Type	Rev. No.	By
A31005	2016.05.30	A3YS1-A150	02	AT

CLASS 150 - A216-WCB

TTS VALVE TECHNOLOGIES SDN BHD