TYPE: A1GA1-J10K

CAST IRON GATE VALVE OS&Y RISING STEM

FLANGE END JIS-10K

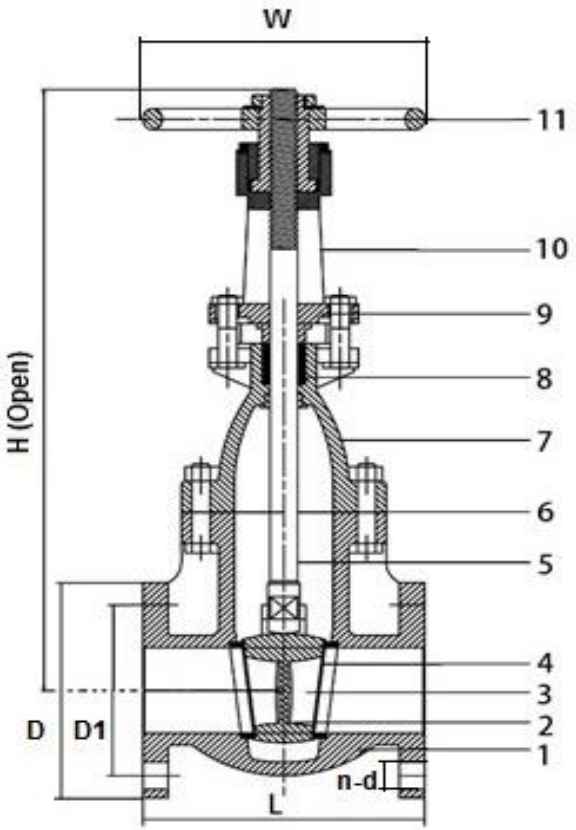

NO.	PART NAME	MATERIAL
1	Body	Cast iron FC200
1	Body ≥ 6"	Cast iron FCD450
2	Seat Ring	SS304
3	Wedge	Cast iron FC200
4	Wedge Ring	SS304
5	Stem	SS416
6	Bonnet Gasket	Graphite
7	Bonnet	Cast iron FC200
8	Gland packing	Graphite
9	Gland	Cast Iron FC200
10	Yoke	Cast Iron FC200
11	Handwheel	Cast Iron FC200

DIMENSIONS:

SIZE	DN	L	H	D	D1	W	n-Ød
2"	50	180	330	155	120	165	4-19
2-1/2"	65	190	350	175	140	165	4-19
3"	80	200	428	185	150	200	8-19
4"	100	229	513	210	175	200	8-19
5"	125	250	625	250	210	250	8-23
6"	150	270	703	280	240	250	8-23
8"	200	290	952	330	290	300	12-23
10"	250	330	1150	400	355	320	12-25
12"	300	350	1314	445	400	350	16-25

MANUFACTURE STANDARD		
	Valve Design	MFR
	Valve Test	API 598
	Flange End Dimension	JIS B2212/2213
	Face to Face	JIS B2202
	Max. Temperature	150 °C

Drawing No.	Date	Type	Rev. No.	By
A11011	2016.05.30	A1GA1-J10K	03	AT

CAST IRON GATE VALVE OS&Y RISING STEM

FLANGE END JIS-10K

TTS VALVE TECHNOLOGIES SDN BHD