TYPE: A1YS1-J10K

CAST IRON Y-STRAINER

FLANGE END JIS10K

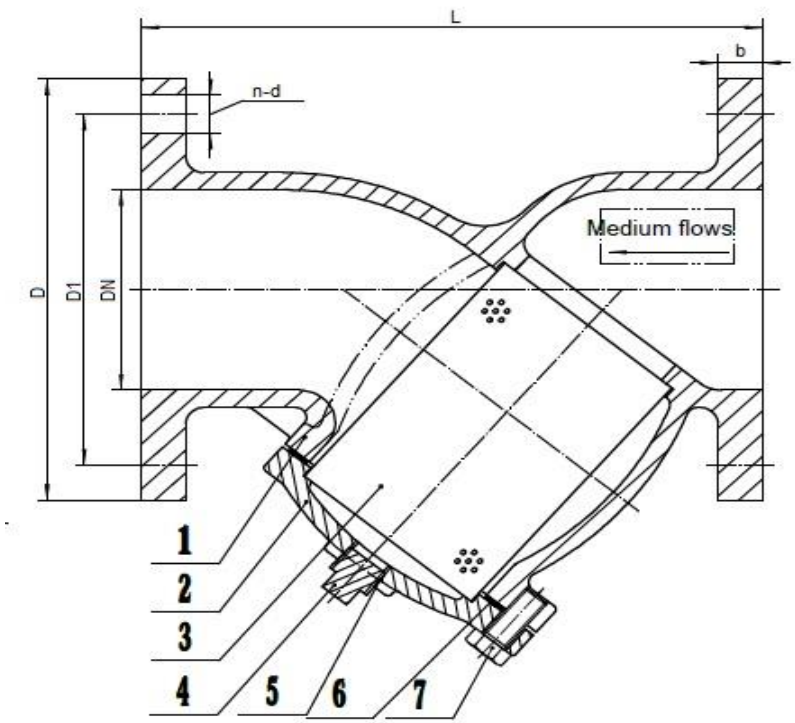

NO.	PART NAME	MATERIAL
1	Body	FC200
2	Bonnet	FC200
3	Screen	SS304
4	Drain plug	35# steel
5	Seal	PTFE
6	Bonnet gasket	Flexible graphite
7	Nut	25# steel

DIMENSIONS:

SIZE	DN	L	D	D1	b	n-Ød
1.5"	40	195	140	105	17	4-19
2"	50	195	155	120	17	4-19
2.5"	65	205	177	140	18	4-19
3"	80	252	185	150	19	8-19
4"	100	277	210	175	20	8-19
5"	125	307	250	210	21	8-23
6"	150	335	280	240	21	8-23
8"	200	475	330	290	22	12-23
10"	250	660	400	355	30	12-25
12"	300	750	445	400	32	16-25
14"	350	810	490	445	34	16-25
16"	400	905	560	510	36	16-27
20"	500	1100	675	620	40	20-27

MANUFACTURE STANDARD		
	Valve Design	MFR
	Valve Test	20 BAR WATER
	Flange End Dimension	JIS 10K
	Face to Face	JIS 10K
	Max. Temperature	220 °C

Drawing No.	Date	Type	Rev. No.	By
A16002	2016.05.30	A1YS1-J10K	02	AT

CAST IRON Y-STRAINER

FLANGE END JIS10K